PMT2

PMT2 Panel Mount Power Supply

PMT-□V150W2CA

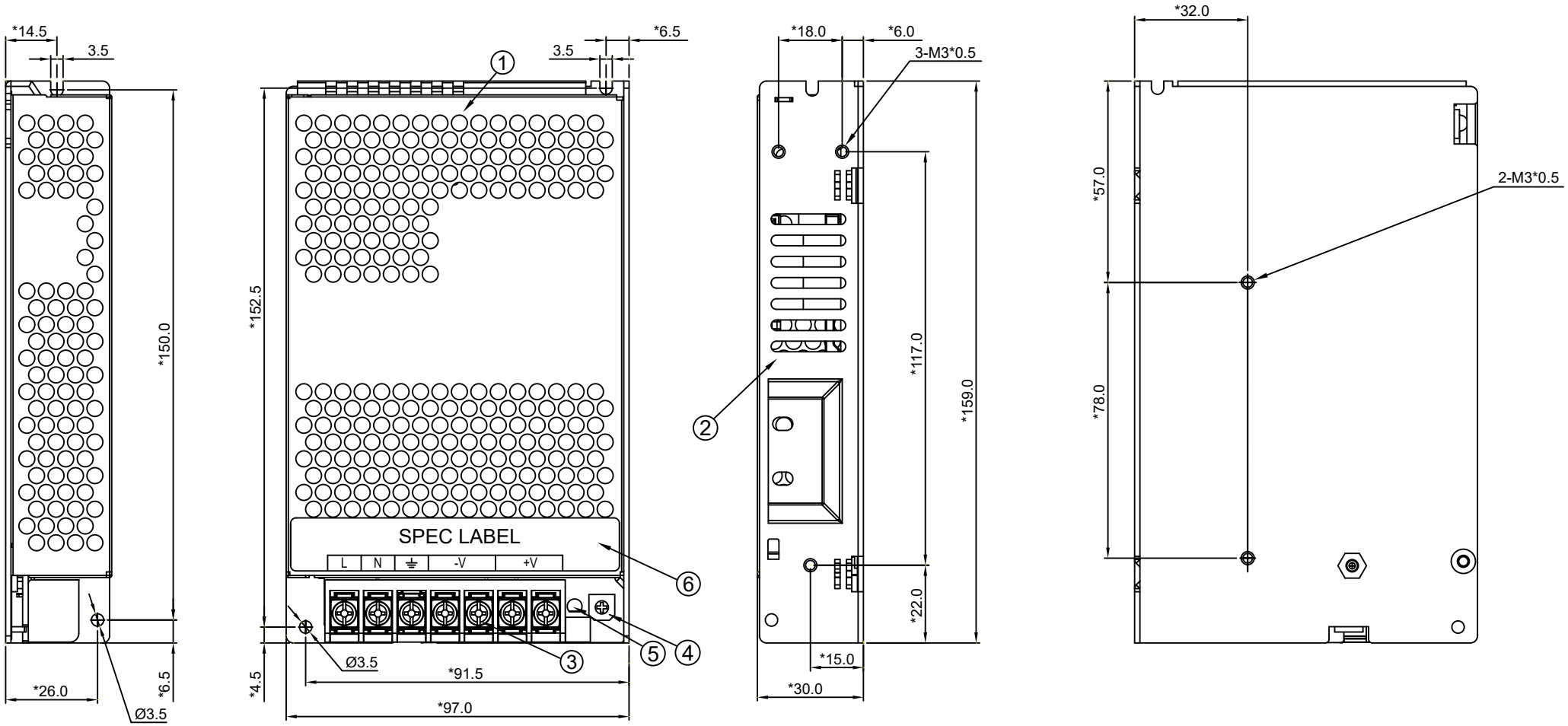

TABLE.

ITEM	PART NAME	REMARKS
①	COVER	NATURE
②	CHASSIS	NATURE
③	TERMINAL BLOCK 7 PIN	BLACK
④	VR	--
⑤	LED	GREEN
⑥	SPEC LABEL	--

UNLESS OTHERWISE SPECIFIED TOLERANCE OF DIMENSION ARE ± 0.5.

© 2021 Delta Electronics, Inc.

www.DeltaPSU.com